KNH-L

Aluminum high dome general purpose flip

top connection head IP68 rated.

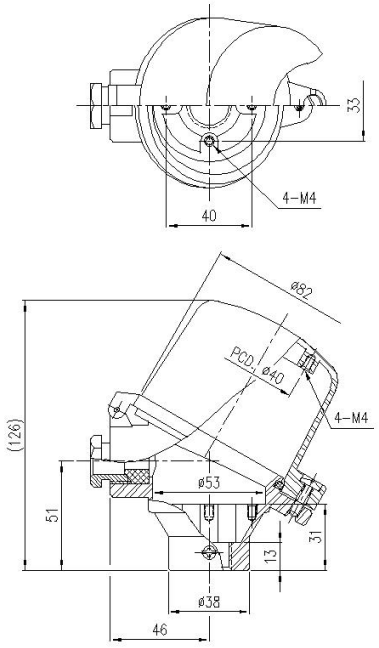

KNH(L)-01: 3/4" X 1/2" NPT

KNH(L)-02: 1/2" X 1/2" NPT

KNH(L)-03: 3/4" X 3/4" NPT

* These products require extra lead time.